AR 2

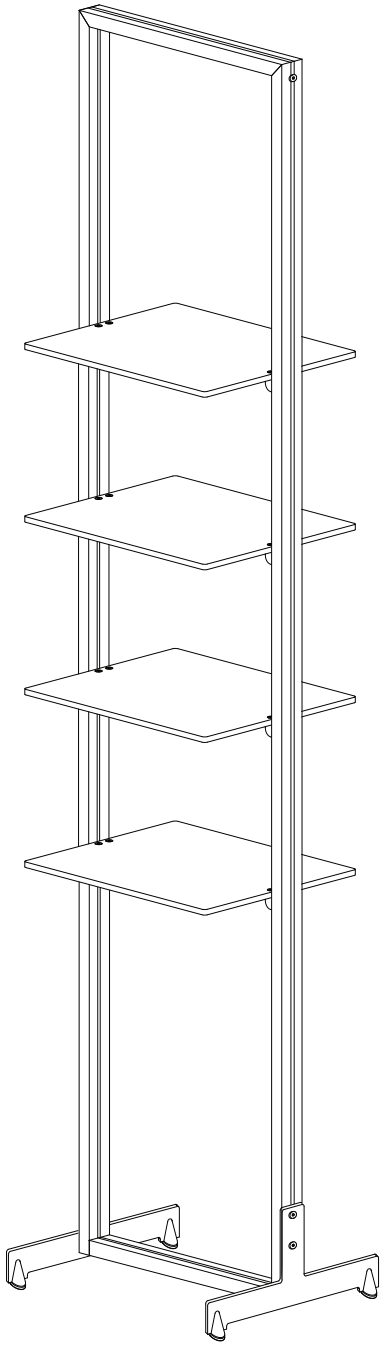

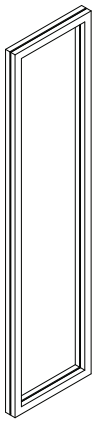

A

1×

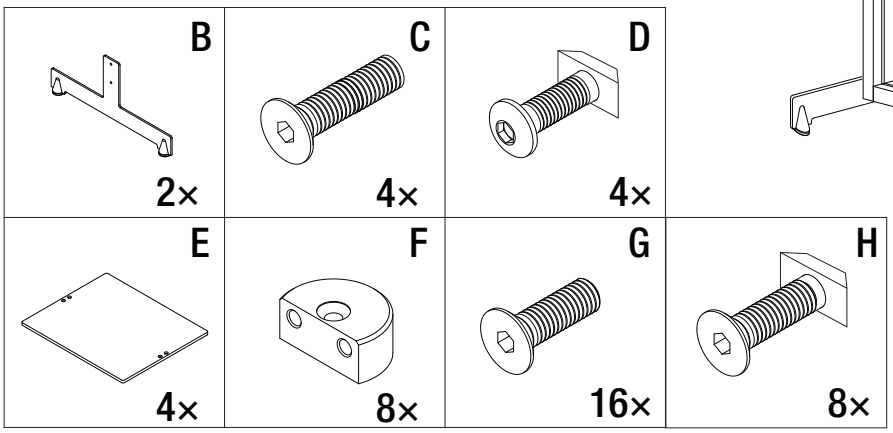

CNS Displays USA
22821 Silverbrook Center Dr., Suite 140, Sterling, VA 20166
1-877-274-9300
www.cnsdisplays.com • info@cnsdisplays.com

CNS Displays CANADA
67 Mowat Ave, Suite 309, Toronto, ON M6K 3E3
416-877-7415
www.cnsdisplays.com • info@cnsdisplays.com

Other international +1 703-435-7770
Fax +1 703-435-3180

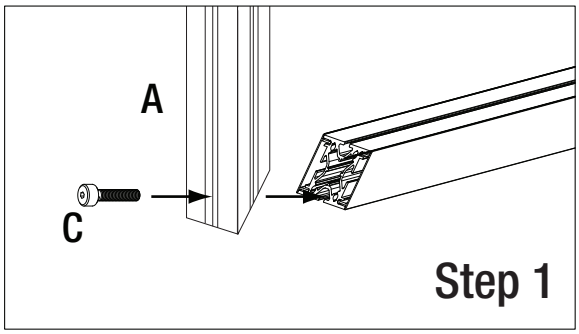
A
C
Step 1

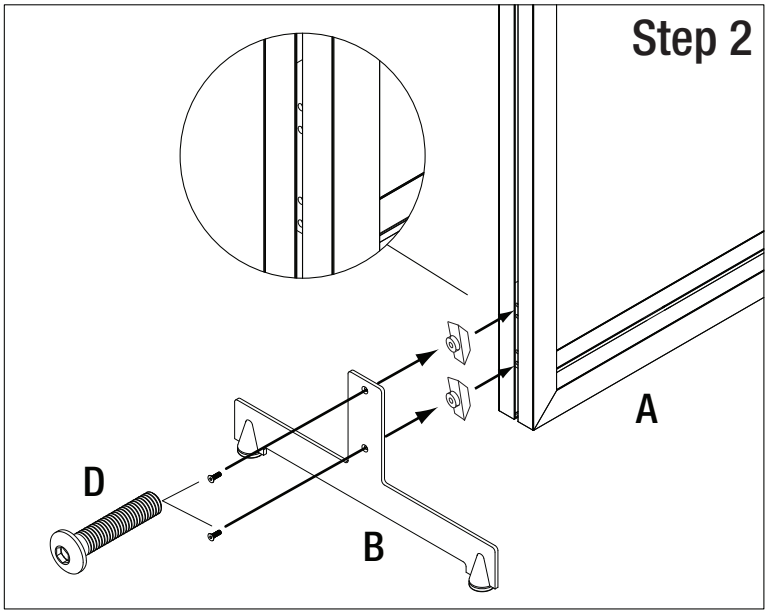
Step 2
A
D
B

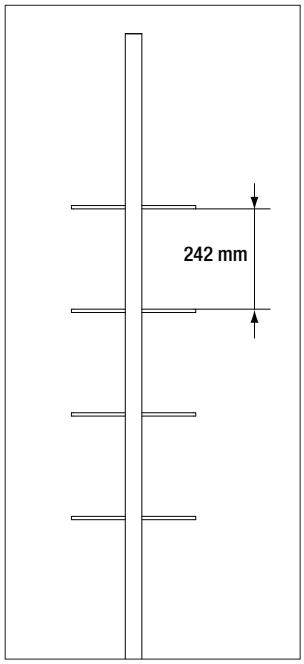
242 mm

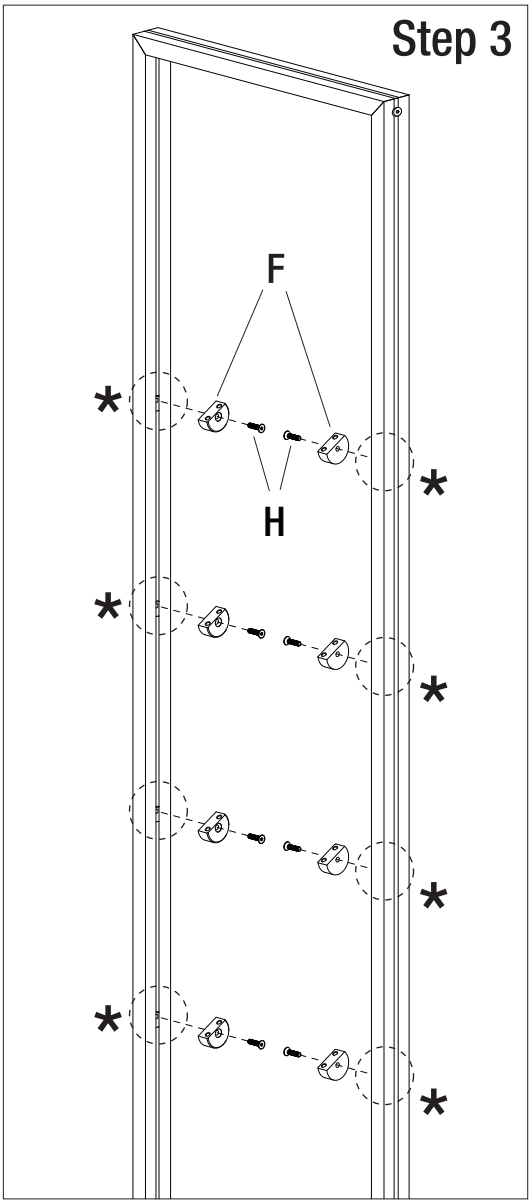
Step 3
F
H
*

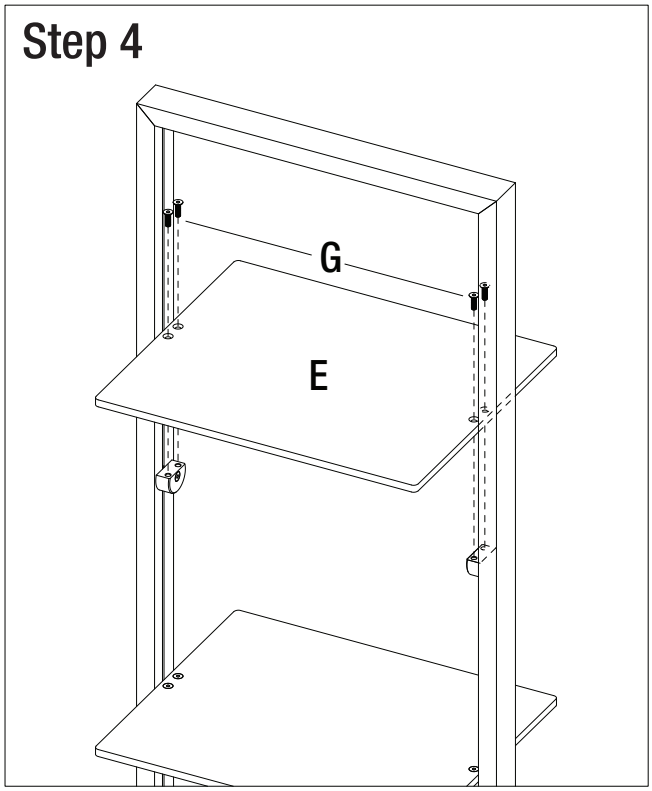
Step 4
G
E